ZEN CONSULTANTS, INC.
1662 ROUTE 300, SUITE 138
NEWBURGH, NEW YORK 12550
(845)-629-1567 (phone)

SEPTIC SYSTEM DESIGN DATA:

	LOT #2
PERCOLATION DATA ✳	PT1 24" DEEP 02/11/25 STABILIZED RATE- 8 MIN/INCH PT2 24" DEEP 02/11/25 STABILIZED RATE- 16 MIN/INCH PT3 24" DEEP 03/27/25 STABILIZED RATE- 16 MIN/INCH
DEEP PIT DATA	DT1 53" DEEP 02/11/25 0"-6" TOPSOIL 6"-36" GRAVELLY SILT LOAM 36"-53" MOTTLED LOAM NO ROCK / WATER DT2 53" DEEP 02/11/25 0"-6" TOPSOIL 6"-36" GRAVELLY SILT LOAM 36"-53" MOTTLED LOAM NO ROCK / WATER DT3 50" DEEP 03/27/25 0"-4" TOPSOIL 4"-34" GRAVELLY SILT LOAM 34"-50" MOTTLED LOAM NO ROCK / WATER
DESIGN DATA	1.) NO OF BEDROOMS - 4(MAX) 2.) DAILY FLOW - 440 G.P.D. 3.) SEPTIC TANK CAPACITY - 1,250 GAL. 4.) STABILIZED PERCOLATION RATE- 16 MIN/INCH 5.) ABSORPTION FIELD LENGTH- REQ'D (3BDRM)- 236 L.F. REQ'D (4BDRM)- 315 L.F. PROV'D-6 @ 53'= 318 L.F. 6) FILL REQUIRED - 18" SHALLOW TRENCH SYSTEM
	INVERT OUT OF HOUSE: 343.73 INVERT INTO S.TANK: 343.63 INVERT OUT OF S.TANK: 343.38 INVERT INTO D-BOX: 343.50

*LOW FLOW FIXTURES TO BE USED PER U.C.H.D. REGULATIONS.

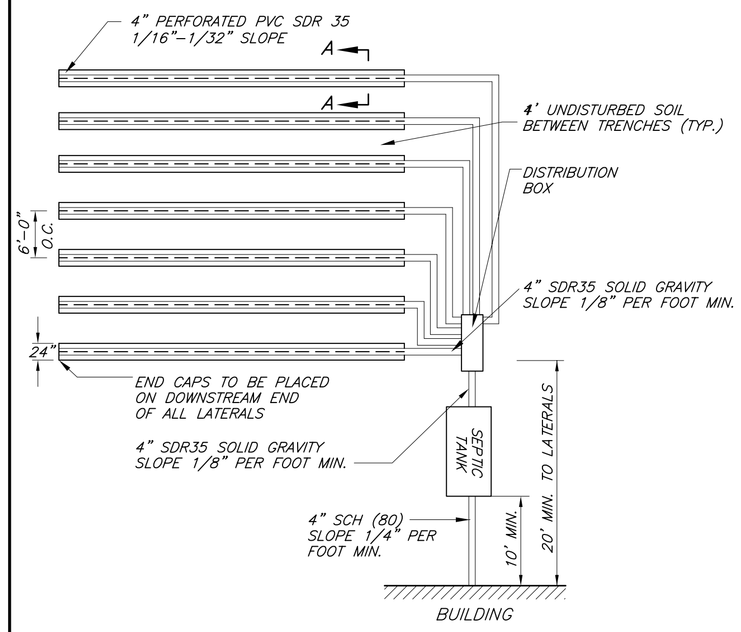

TYPICAL PLAN VIEW
N.T.S

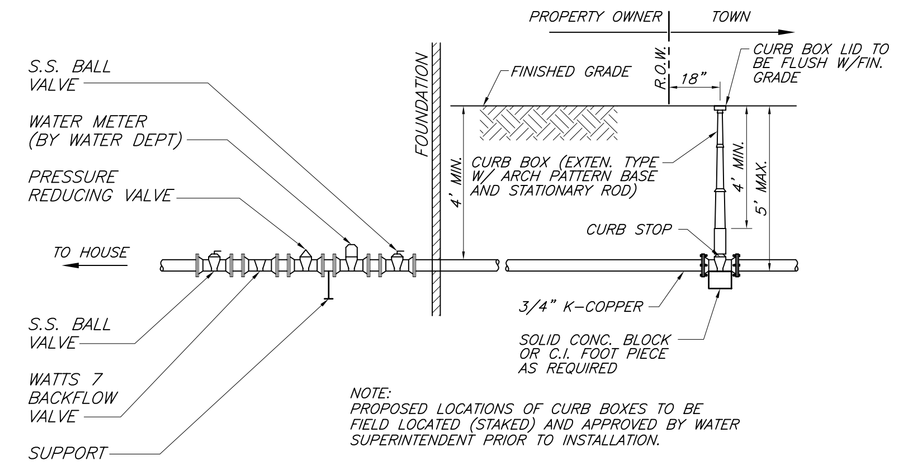

NOTE:
PROPOSED LOCATIONS OF CURB BOXES TO BE FIELD LOCATED (STAKED) AND APPROVED BY WATER SUPERINTENDENT PRIOR TO INSTALLATION.

WATER SERVICE DETAIL
N.T.S.

SEPTIC SYSTEM GENERAL NOTES:

1. ALL PORTIONS OF THE SEPTIC FIELD WILL BE A MINIMUM DISTANCE OF 200 FEET UP SLOPE AND 100 FEET DOWN SLOPE FROM ANY WELL.
2. SEPTIC TANK TO BE LOCATED A MINIMUM DISTANCE OF 10 FEET FROM ANY BUILDING OR PROPERTY LINE.
3. CELLAR DRAINS, ROOF DRAINS OR FOOTING DRAINS SHALL NOT BE DISCHARGED IN THE VICINITY OF ABSORPTION FIELD.
4. NO SWIMMING POOLS, DRIVEWAYS, OR STRUCTURES THAT MAY COMPACT THE SOIL SHALL NOT BE CONSTRUCTED OVER ANY PORTION OF THE ABSORPTION FIELD.
5. NO TRENCHES TO BE INSTALLED IN WET SOIL.
6. RAKE SIDES AND BOTTOM OF TRENCH PRIOR TO PLACING GRAVEL IN ABSORPTION TRENCH.
7. GROUT ALL PIPE PENETRATIONS TO CONC. SEPTIC TANK & DISTRIBUTION BOX.
8. DISTRIBUTION LINE ARE TO BE CAPPED.
9. THE PERIMETER OF THE ABSORPTION FIELD SHOULD BE GRADED TO DIVERT SURFACE WATER.
10. ALL NEWLY DISTURBED AREAS SHALL BE IMMEDIATELY STABILIZED UPON CONSTRUCTION COMPLETION USING GRASS SEED & MULCH.
11. NO SEWAGE SYSTEM SHALL BE PLACED WITH IN 100' OF ANY WATER COURSE OR 50' OF ANY DRAINAGE DITCH.
12. ALL LAUNDRY AND KITCHEN WASTES SHALL BE DISCHARGED INTO SEWAGE SYSTEM.
13. BENDS SHALL BE USED WHEN ENTRANCE OR EXIT FROM SEPTIC TANK IS NOT APPROXIMATELY STRAIGHT. IF BENDS ARE USED AT POINTS OTHER THAN ENTRANCE OR EXIT POINTS, THEN A CLEANOUT IS REQUIRED.
14. THE DESIGN AND LOCATION OF THE SANITARY FACILITIES SHALL NOT BE CHANGED WITHOUT UCHD REVIEW AND APPROVAL.
15. HEAVY EQUIPMENT SHALL BE KEPT OFF THE AREA OF THE ABSORPTION FIELDS EXCEPT DURING THE ACTUAL CONSTRUCTION. THERE SHALL BE NO UNNECESSARY MOVEMENT OF CONSTRUCTION EQUIPMENT IN THE ABSORPTION FIELD AREA BEFORE, DURING, OR AFTER CONSTRUCTION. EXTREME CARE MUST BE TAKEN DURING THE ACTUAL CONSTRUCTION SO AS TO AVOID ANY UNDUE COMPACTION THAT COULD RESULT IN A CHANGE OF THE ABSORPTION CAPACITY OF THE SOIL ON WHICH THE DESIGN WAS BASED.
16. THIS SYSTEM WAS NOT DESIGNED TO ACCOMMODATE GARBAGE GRINDERS, JACUZZI TYPE SPA TUBS OVER 100 GALLONS, OR WATER CONDITIONERS. AS SUCH, THESE ITEMS SHALL NOT BE INSTALLED UNLESS THE SYSTEM IS REDESIGNED TO ACCOUNT FOR THEM & REAPPROVDED BY THE OCHD.
17. THERE MUST BE AN UNINTERRUPTED POSITIVE SLOPE FROM THE SEPTIC TANK (OR ANY PUMPING OR DOSING CHAMBER) TO THE' HOUSE, ALLOWING SEPTIC GASES TO DISCHARGE THROUGH THE STACK VENT.
18. THE PURCHASER OF THIS LOT SHALL BE PROVIDED WITH A COPY OF THE APPROVED PLANS AND AN ACCURATE AS-BUILT DRAWING OF ANY EXISTING SANITARY FACILITIES. INCLUDING NYSDEC WELL COMPLETION REPORT. THE PURCHASER SHALL ALSO BE ADVISED OF ANY ROUTINE' OR SPECIAL MAINTAINANCE PROCEDURES THAT MAY BE NECESSARY. (REFER TO PAGES 58-61 OF THE NYSDOH DESIGN HANDBOOK FOR RECOMMENDED ROUTINE OPERATION AND MAINTENANCE ITEMS).
19. THE DESIGN ENGINEER WILL BE REQUIRED TO CERTIFY THE COMPLETED DISPOSAL FACILITY WITH AN AS-BUILT DRAWING SUBMITTED TO THE TOWN PRIOR TO CERTIFICATE OF OCCUPANCY BEING ISSUED.
20. SEPTIC TANKS SHOULD BE INSPECTED PERIODICALLY AND PUMPED EVERY 2-3 YEARS.
21. DISTRIBUTION BOXES SHOULD BE INSPECTED PERIODICALLY TO ASSURE THAT THEY ARE LEVEL AND OPERATING PROPERLY.

STANDARD NOTES:

THE DESIGN, CONSTRUCTION AND INSTALLATION SHALL BE IN ACCORDANCE WITH THIS PLAN AND GENERALLY ACCEPTED STANDARDS IN EFFECT AT THE TIME OF CONSTRUCTION WHICH INCLUDE:

"APPENDIX 75-A, WASTE TREATMENT - INDIVIDUAL HOUSEHOLD SYSTEMS, NEW YORK STATE SANITARY CODE."
"WASTE TREATMENT HANDBOOK, INDIVIDUAL HOUSEHOLD SYSTEMS, NEW YORK STATE DEPARTMENT OF HEALTH."
"RURAL WATER SUPPLY, NEW YORK STATE DEPARTMENT OF HEALTH."
"PLANNING THE SUBDIVISION AS PART OF THE TOTAL ENVIRONMENT, NEW YORK STATE DEPARTMENT OF HEALTH."

"THIS PLAN IS APPROVED AS MEETING THE APPROPRIATE AND APPLIED TECHNICAL STANDARDS, GUIDELINES, POLICIES AND PROCEDURES FOR ARRANGEMENT OF SEWAGE DISPOSAL AND TREATMENT AND WATER SUPPLY FACILITIES.
ALL WELLS AND S.D.S. EXISTING OR APPROVED WITHIN 200' OF THE PROPOSED WELLS AND S.D.S. ARE SHOWN ON THIS PLAN ALONG WITH ANY OTHER ENVIRONMENTAL HAZARDS IN THE AREA THAT MAY AFFECT THE DESIGN AND FUNCTIONAL ABILITY OF THE S.D.S. AND WELL.
IT SHALL BE DEMONSTRATED BY THE CONTRACTOR TO THE CERTIFYING ENGINEER THAT THE SEPTIC TANK IS SEALED, WATER TIGHT AND ACCEPTABLE FOR USE. THIS SHALL REQUIRE, AS A MINIMUM, THE FILLING OF THE TANK WITH WATER TO OBSERVE IF IT IS IN FACT SEALED, WATERTIGHT AND ACCEPTABLE FOR USE.
ALL PROPOSED WELLS AND SERVICE LINES ON THIS PLAN ARE ACCESSIBLE FOR INSTALLATION AND PLACEMENT.
TRENCH BOTTOMS TO BE SET LEVEL AND PARALLEL TO EXISTING CONTOURS.

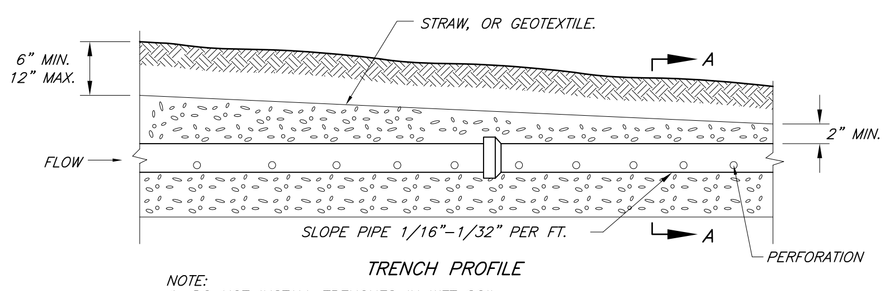

TRENCH PROFILE

NOTE:
1. DO NOT INSTALL TRENCHES IN WET SOIL
2. RAKE SIDES AND BOTTOM OF TRENCH PRIOR TO PLACING GRAVEL.
3. ENDS OF ALL DISTRIBUTION PIPES MUST BE PLUGGED.
4. TRENCHES TO BE 6' MINIMUM ON CENTER.
5. 4' MINIMUM OF UNDISTURBED SOIL TO BE MAINTAIN BETWEEN TRENCHES.
6. THE BOTTOM OF THE TRENCH TO BE SET LEVEL.
7. LATERALS FOR GRAVITY-FED SYSTEMS SHOULD BE SLOPED 1/16"-1/32" PER FT.

ABSORPTION TRENCH DETAIL
N.T.S.

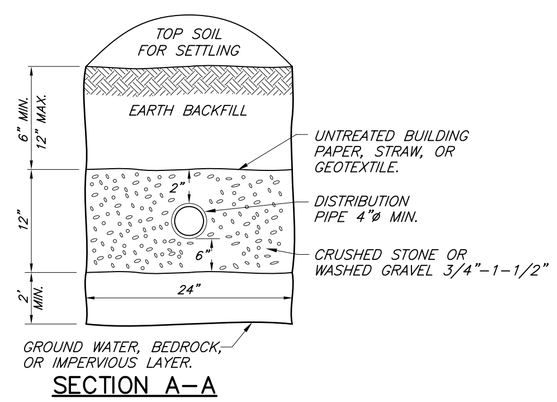

SECTION A-A

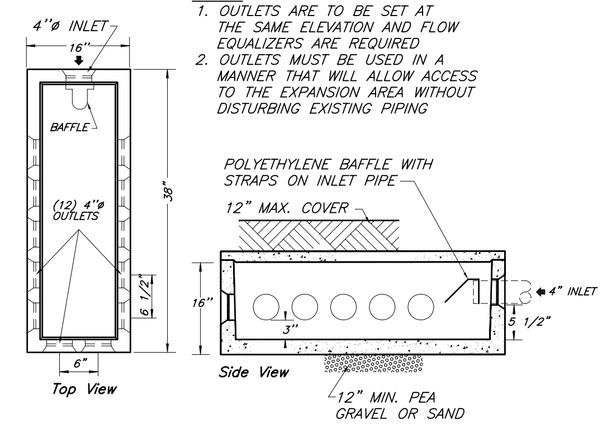

NOTES:
1. OUTLETS ARE TO BE SET AT THE SAME ELEVATION AND FLOW EQUALIZERS ARE REQUIRED
2. OUTLETS MUST BE USED IN A MANNER THAT WILL ALLOW ACCESS TO THE EXPANSION AREA WITHOUT DISTURBING EXISTING PIPING

12-HOLE DISTRIBUTION BOX
N.T.S.

SPECIFICATIONS
CONCRETE MINIMUM STRENGTH- 4,000 PSI AT 28 DAYS
REINFORCEMENT- FIBER
AIR ENTRAPMENT- 5%
PIPE CONNECTION- POLYLOK SEAL (PATENTED)
LOAD RATING- 300PSF WEIGHT= 75 LBS.

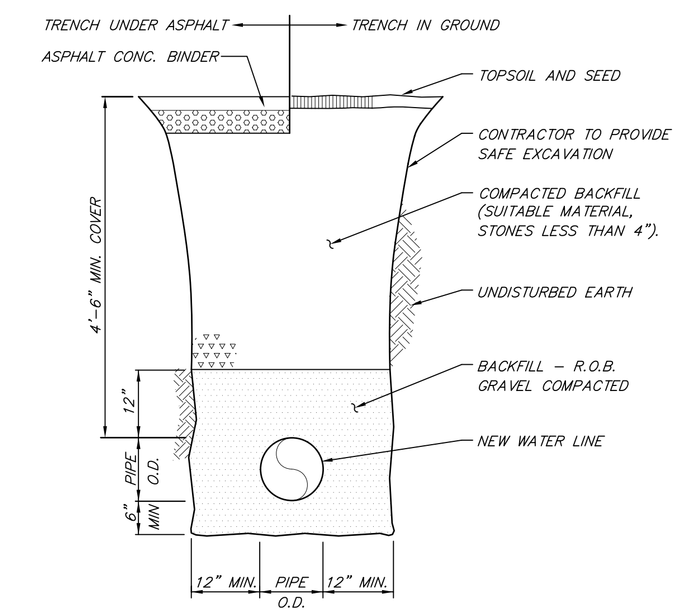

TYPICAL WATER TRENCH
N.T.S.

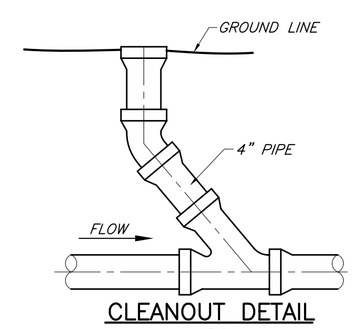

CLEANOUT DETAIL
N.T.S.

1. TO BE INSTALLED BEFORE BEND AT ALL BEND LOCATIONS.
2. TO BE INSTALLED WHERE PIPE DEFLECTION EXCEEDS EXCEEDS 15' AT INTERSECTION WITH CONCRETE TANKS

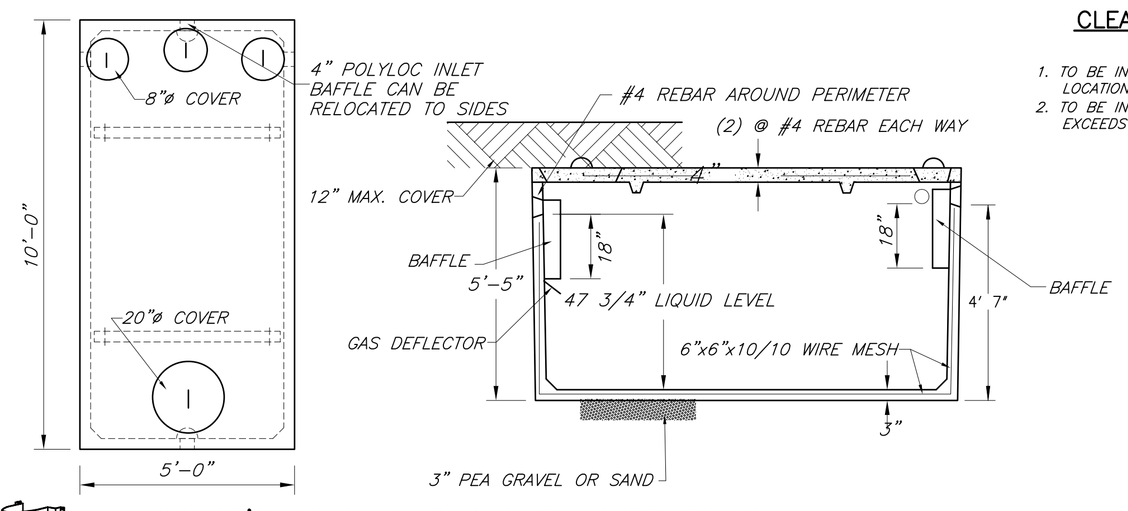

WOODARD'S 1250gal. SEPTIC TANK OR EQUAL
N.T.S.

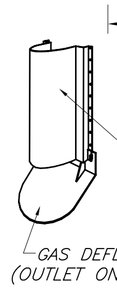

SPECIFICATIONS
CONCRETE MINIMUM STRENGTH- 4,000 PSI AT 28 DAYS
REINFORCEMENT- 6"x6"10GA. WWF, #4 REBAR
AIR ENTRAPMENT- 5%
CONSTRUCTION JOINT- BUTYL RUBBER - BASE CEMENT
PIPE CONNECTION- POLYLOC SEAL (PATENTED)
LOAD RATING- 300PSF WEIGHT = 9,500LBS

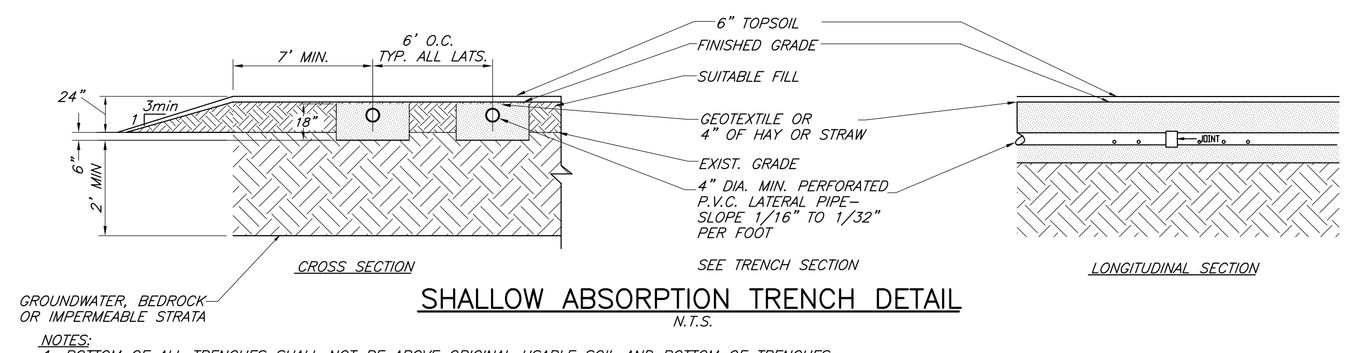

SHALLOW ABSORPTION TRENCH DETAIL
N.T.S.

NOTES:
1. BOTTOM OF ALL TRENCHES SHALL NOT BE ABOVE ORIGINAL USABLE SOIL AND BOTTOM OF TRENCHES SHALL BE 6" BELOW ORIGINAL GRADE.
2. USABLE FILL SHOULD HAVE A PERCOLATION RATE SIMILAR TO BUT NOT FASTER THAN THE USABLE SOIL PERCOLATION RATE.
3. TRENCH BOTTOMS TO BE SET LEVEL AND PARALLEL TO EXISTING CONTOURS.
4. MAXIMUM DEPTH OF USABLE FILL PLUS 6" OF TOPSOIL SHALL NOT EXCEED 30".
5. THE EDGE OF THE FILL MATERIAL SHALL BE TAPERED AT A SLOPE OF NO GREATER THAN ONE VERTICAL TO THREE HORIZONTAL. ON SLOPED SITES A DIVERSION DITCH SHALL BE PLACED ON THE UPHILL SIDE TO PREVENT RUNOFF FROM ENTERING THE FILL.
6. FILL SHALL EXTEND AT LEAST SIX FEET BEYOND THE ENDS OF TRENCHES BEFORE STARTING ONE ON THREE EDGES OF FILL.

3. REVISED 04/15/2025; AS PER UCHD COMMENTS
2. REVISED 04/03/2025; AS PER UCHD COMMENTS
1. REVISED 03/24/2025; AS PER UCHD COMMENTS

ENGINEER	LANDS OF BARGER PROPERTIES, LLC
WILLIAM J. MORRAU, P.E.	2 LOT SUBDIVISION MISC DETAILS SBL: 108.4-1-12 TOWN OF MARLBORO, ULSTER CNTY.

DATE	SCALE	JOB NUMBER	SHEET NUMBER
12/16/2024	1" = 40'	24-039-BPR	3 OF 3